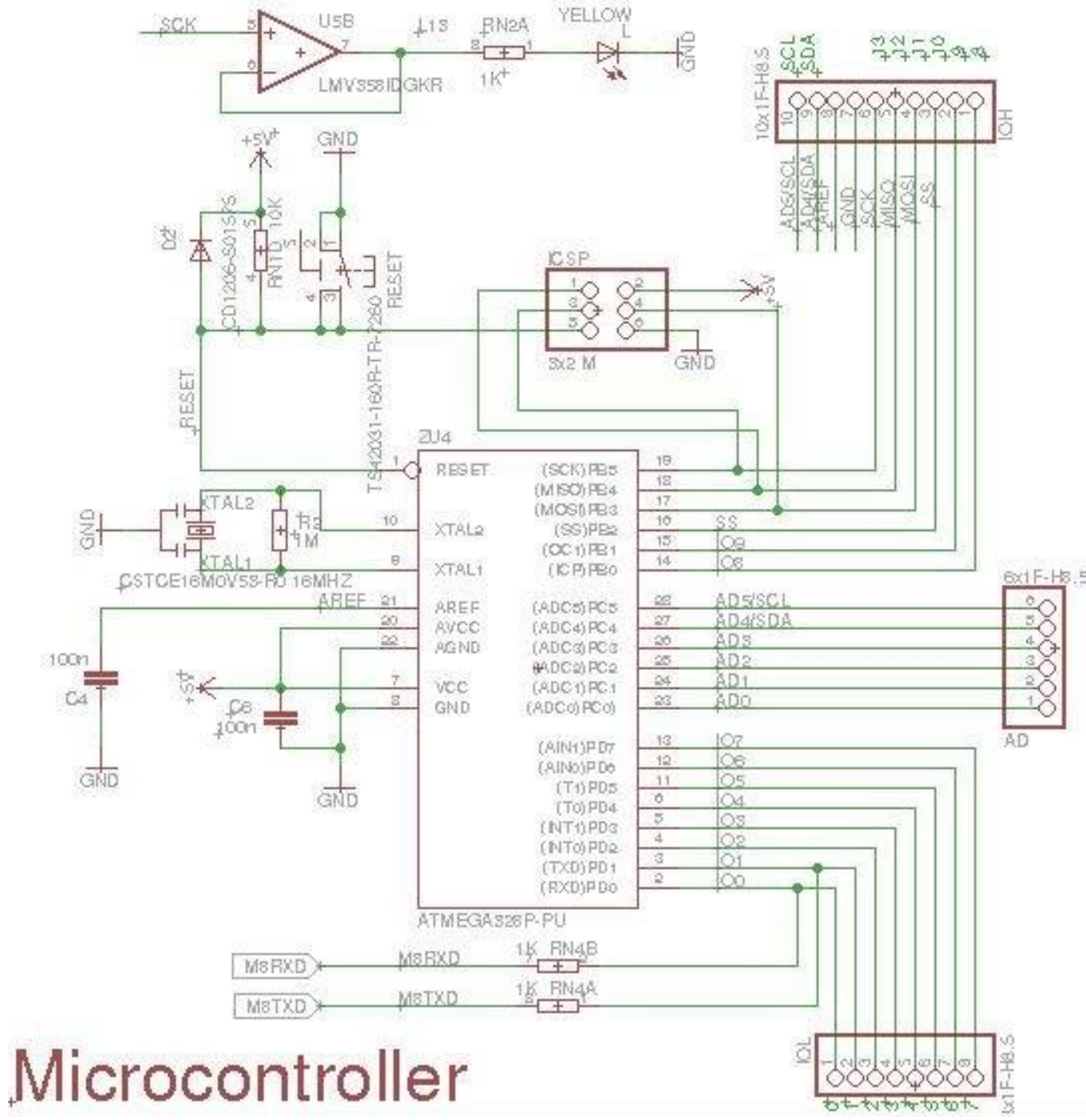

Microcontroller

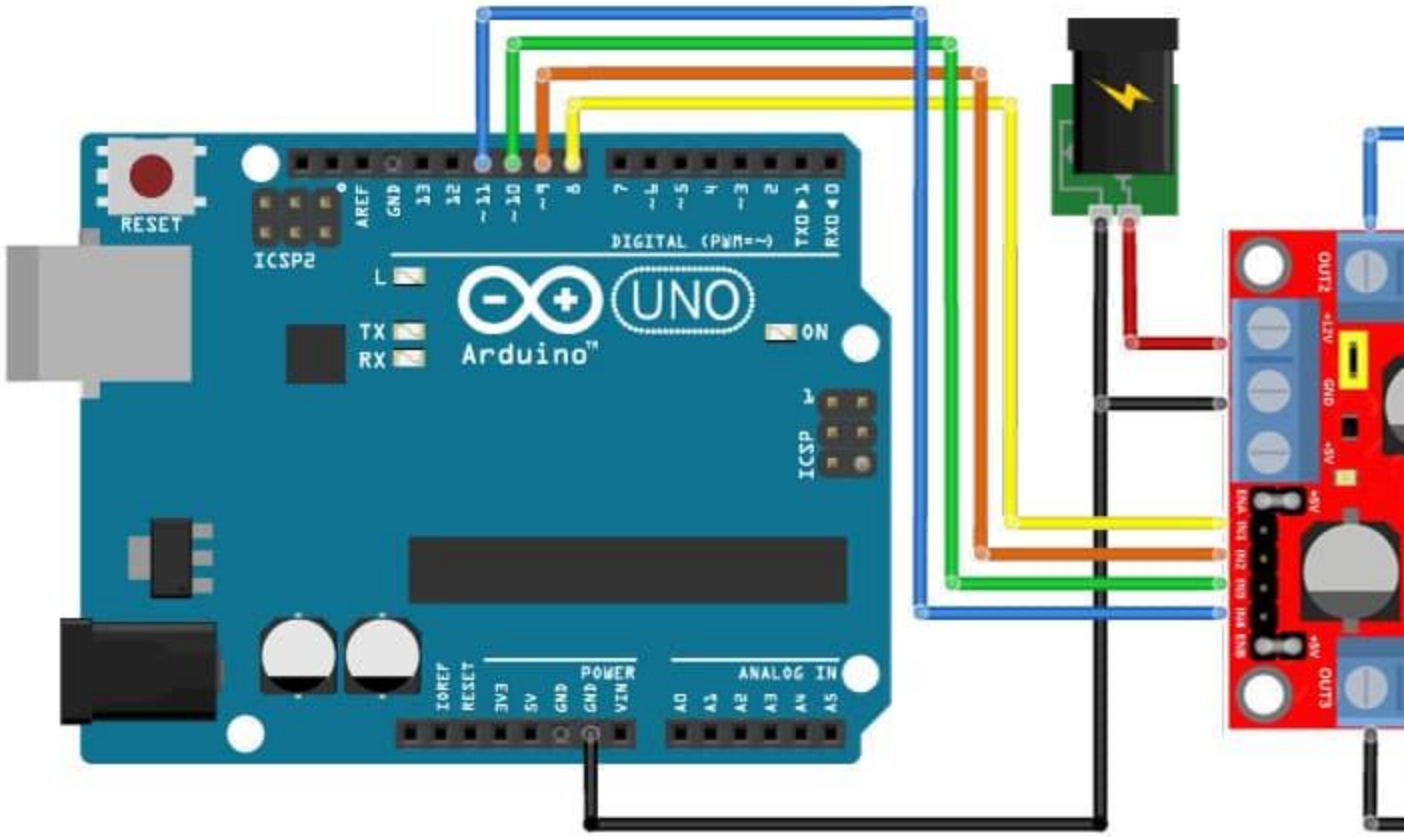
RESET
ICSP2
AREF
GND
13
12
~11
~10
~9
8
7
~6
~5
4
~3
2
TX→1
RX←0
DIGITAL (PWM=~)
L
TX
RX
UNO
Arduino™
ON
ICSP
POWER
IOREF
RESET
3V3
5V
GND
GND
VIN
ANALOG IN
A0
A1
A2
A3
A4
A5
OUT2
+12V
GND
+5V
+5V
ENA
IN1
IN2
IN3
IN4
ENB
+5V
OUT3

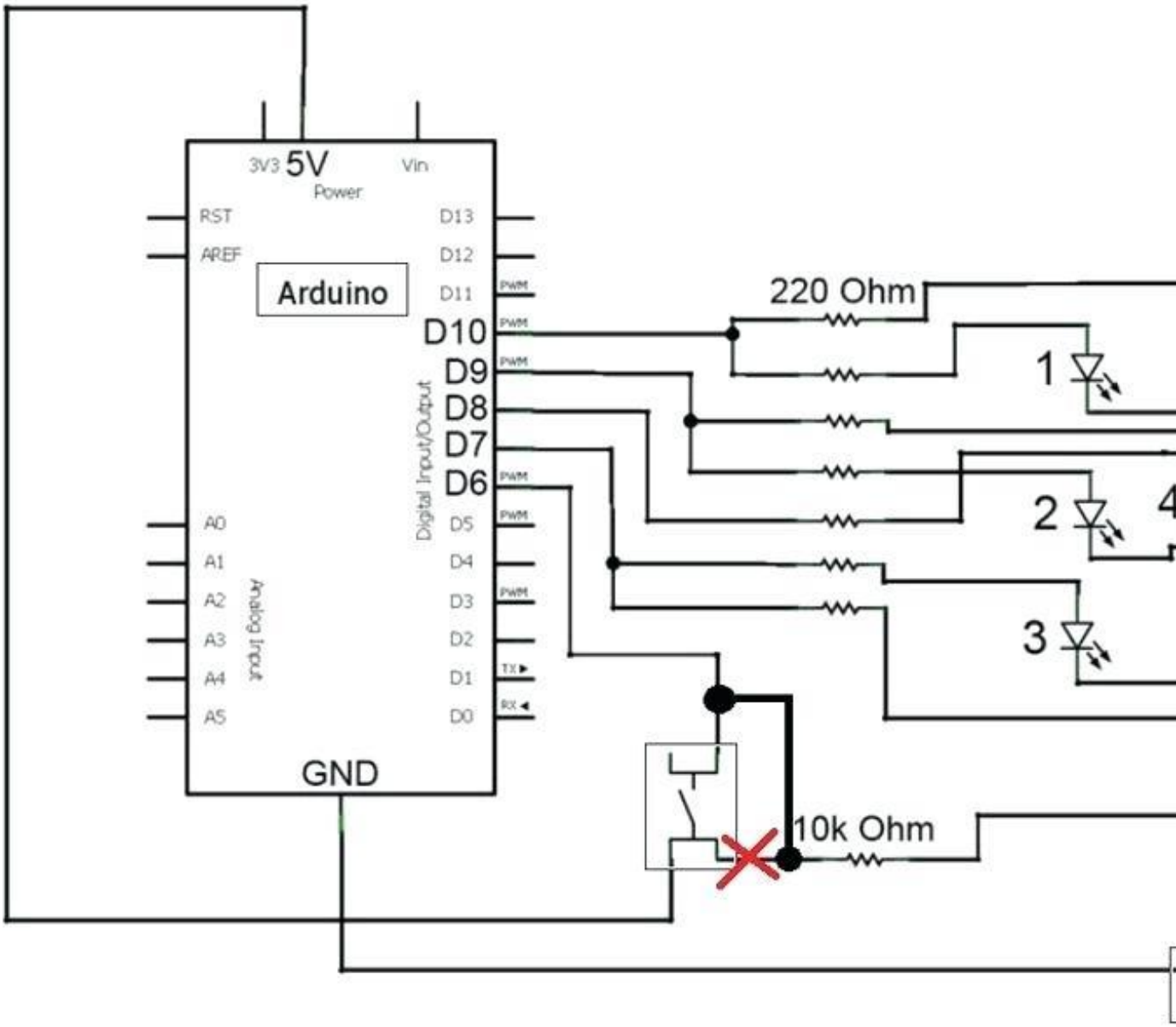
3V3
5V
Power
Vin
RST
AREF
Arduino
D13
D12
D11
D10
D9
D8
D7
D6
D5
D4
D3
D2
D1
D0
PWM
TX
RX
Digital Input/Output
A0
A1
A2
A3
A4
A5
Analog Input
GND
220 Ohm
1
2
3
4
10k Ohm

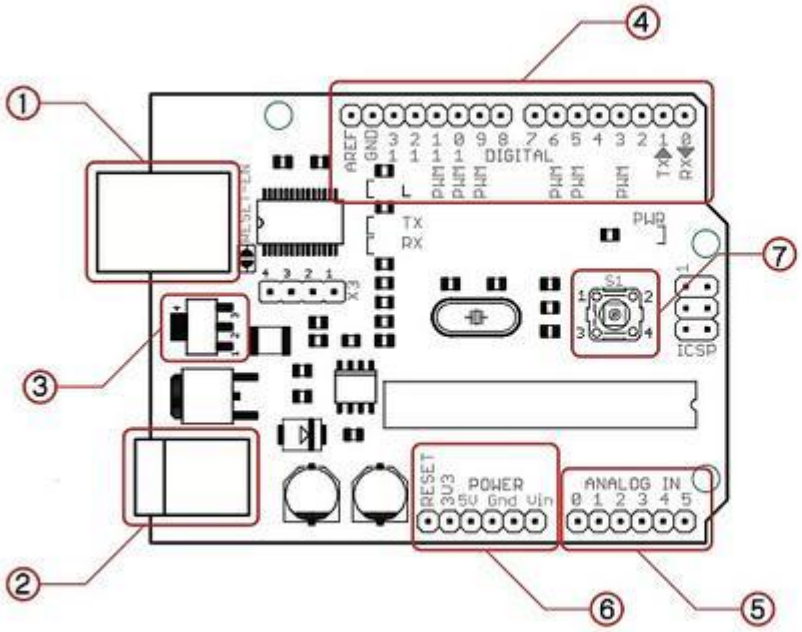

The most important parts on the Arduino board high lighted in red:

1: USB connector
2: Power connector
3: Automatic power switch
4: Digital pins
5: Analog pins
6: Power pins
7: Reset switch

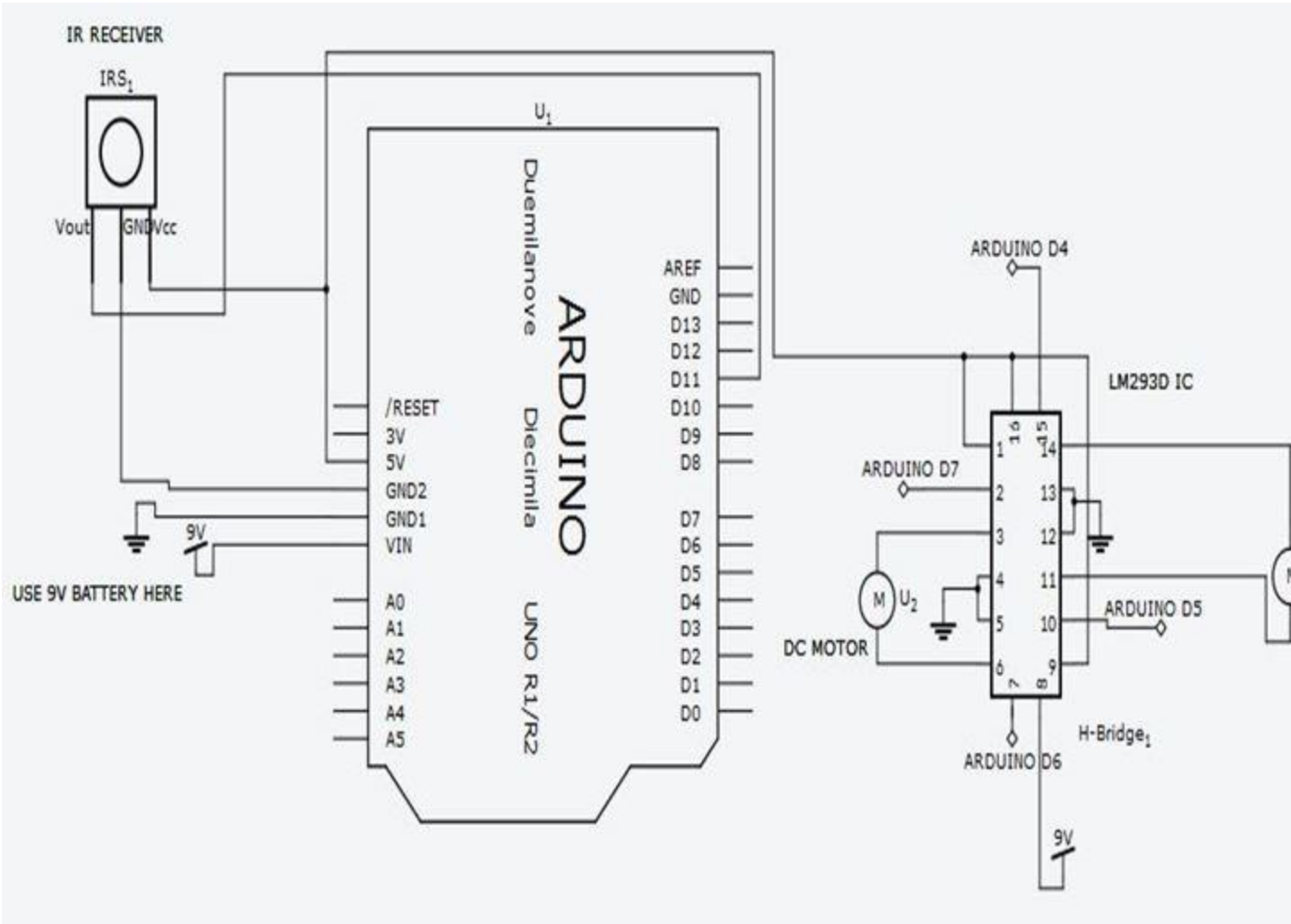

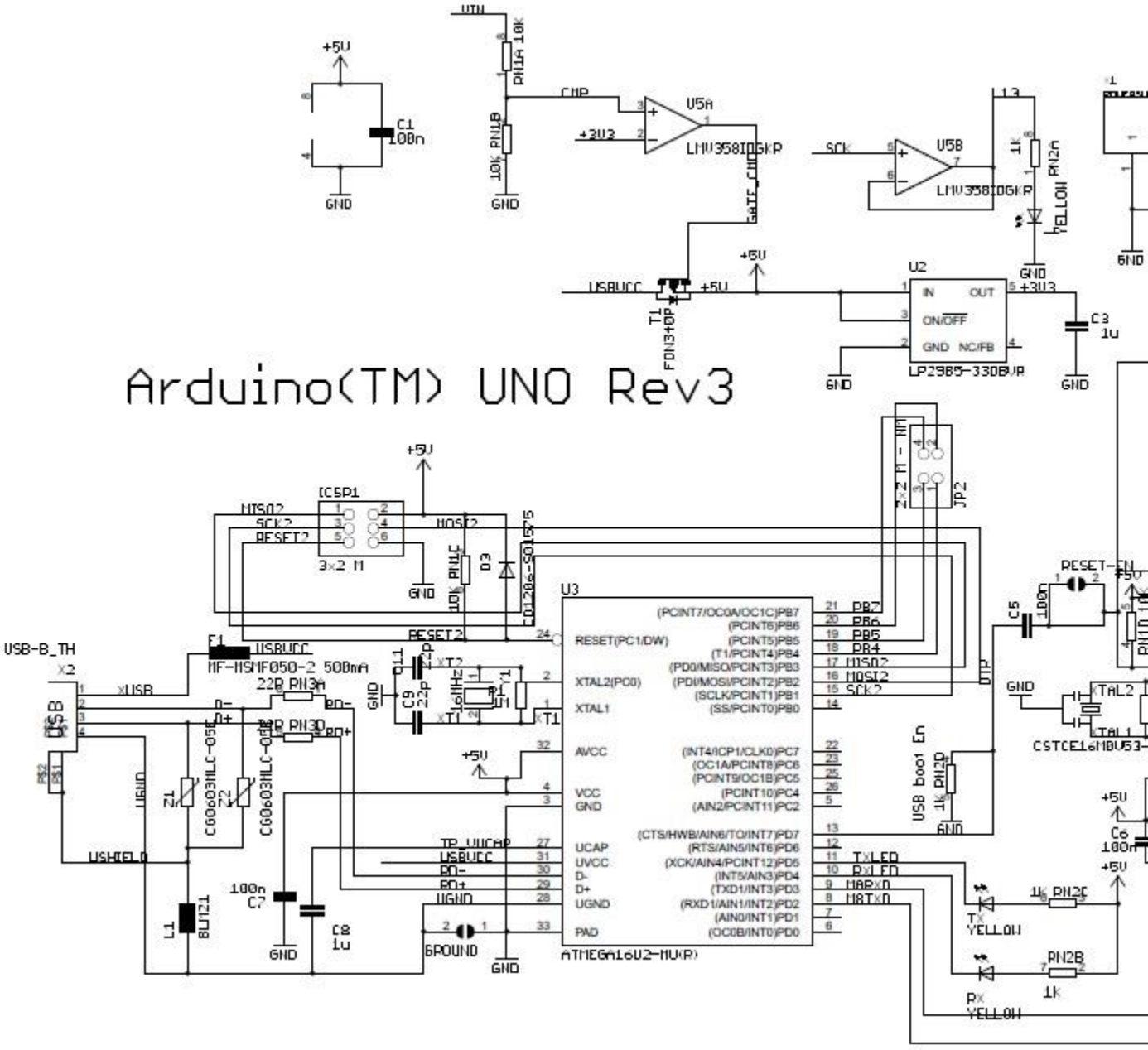
Arduino(TM) UNO Rev3
U5A
LMV358IDGKR
U5B
LMV358IDGKR
U2
LP2985-330BVR
IN
OUT
ON/OFF
GND
NC/FB
T1
FDN340P
U3
ATMEGA16U2-MU(R)
RESET(PC1/DW)
XTAL2(PC0)
XTAL1
AVCC
VCC
GND
UCAP
UVCC
D-
D+
UGND
PAD
ICSP1
3x2 M
JP2
2x2 M - NM
USB-B_TH
X2
F1
MF-MSMF050-2 500mA
L1
BLM21
Z1
Z2
CG0603MLC-05E
CG0603MLC-05E
C1
100n
C3
1u
C5
100n
C6
100n
C7
100n
C8
1u
C9
22P
C11
22P
XT1
XT2
16MHZ
D3
CD1206-S01575
USB boot En
TX
YELLOW
RX
YELLOW
TXLED
RXLED
M8RXD
M8TXD
GROUND
+5V
+3V3
GND
USBVCC
USHIELD
UGND
D-
D+
RESET-EN
CSTCE16M0V53-